AGILEVIEW LCD/PLASMA CONSOLES

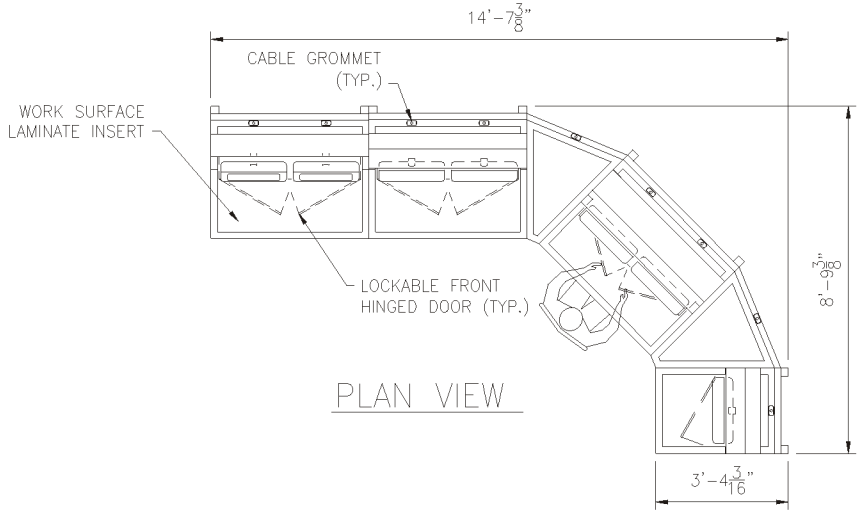

PLAN VIEW

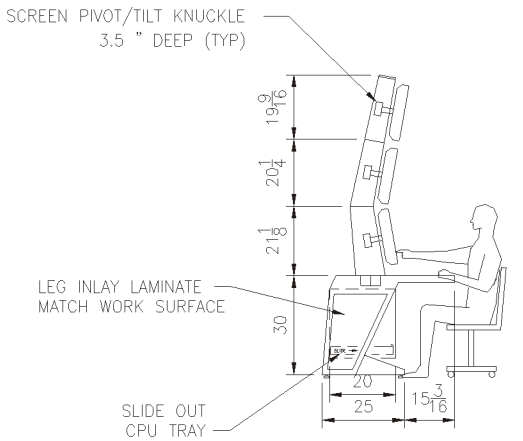

L. SIDE ELEV.

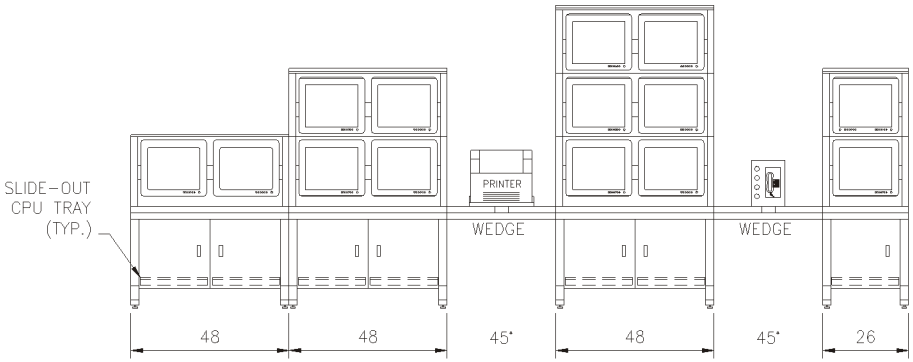

FRONT ELEV. VIEW

(ANGLES SHOWN FLAT FOR CLARITY)

NOTES:

1. DIMENSIONS ARE IN INCHES UNLESS OTHERWISE NOTED.
2. DESK TOP INLAY: LAMINATE, NEVERMAR BURGUNDY OR CHARCOAL MATRIX
3. PAINT: ALL METAL SURFACES (EXCEPT CABINETS) – OPAQUE BEIGE
   CABINETS & DOORS – GOTHIC BLACK, POWDER COAT
   SIDE LEG INLAY – MATCH WORK SURFACE LAMINATE
4. CONSOLE ENCLOSURES: COMPARABLE TO NEMA 1

IMAGEVISION, INC.
Modular Consoles

PO Box F
La Grange, TX 78945
(888) 664-6762
(979) 247-4068
Fax: (979) 247-4062
http://www.ImageVisionInc.com

DWG. SCALE: NONE

DATE: 4/18/03 BY: BT

PAGE NO. 1 OF 1

TITLE: IMAGEVISION AGILEVIEW LAYOUT
1, 2, & 3-TIERS OF SCREENS
15, 30, 45-DEGREE WEDGES

DRAWING NUMBER: AGILEVIEW REVISION: A